Trade of Sheet Metalwork	
Module 4:	**General Sheet Metalwork**
Unit 6:	**Blow Cap, Stock and Apron**
	Phase 2

Table of Contents

List of Figures **4**

List of Tables **4**

Document Release History **5**

Module 4 – General Sheet Metalwork **6**

Unit 6 – Blow Cap, Stock and Apron 6
Learning Outcome: 6
Key Learning Points: 6
Training Resources: 7
Key Learning Points Code: 7

Blow Cap, Stock and Apron **9**

Radial Line Method to Develop Cones 10

Self Assessment **11**

Answers to Questions 1-2. Module 4.Unit 6 ..... **12**

Index **13**

List of Figures

Figure 1 - Blow Cap, Stock and Apron..... 8
Figure 2 - A = Blowcap B = Stock C = Apron 9
Figure 3 - Radial Line Method..... 10

List of Tables

Document Release History

Date	Version	Comments
15/11/06	First draft	
09/01/07	Implemented edits from Brendan Deasy.	
08/04/14	2.0	SOLAS transfer

Module 4 – General Sheet Metalwork

Unit 6 – Blow Cap, Stock and Apron

Duration – 10.5 Hours

Learning Outcome:

By the end of this unit each apprentice will be able to:

- Produce blowcap, stock and apron using the radial and parallel line method of development
- Organise the production sequence
- Assemble a pop riveted joint
- Produce weather apron using nuts, bolts and sealant
- Produce and install blowcap brackets
- Swage apron and blowcap for added strength
- Cost a component based on time and material

Key Learning Points:

D	Drawing and development of right cones cowl.
Rk	Design of blowcap/cap cones stock (pipe) and apron. Fasteners – "pop" rivets and bolts.
P	Correct sequence of operations and calculations of material requirements.
Rk	Use of sealant for outdoor work.
Sk	Shaping of cones/swaging – bench stake.
Sk	Job card completion, cost manufacturing based on material & actual time.
M	Circumference calculations and edge allowance.

Training Resources:

- Toolkit
- Job card
- Nuts, bolts
- 0.6mm galvanised mild steel
- Tools and machinery/equipment
- Work samples
- Sealant
- Notepad
- 20 x 3 mild steel
- Conical bench stake
- Rivets/Gun
- Safety equipment and protective clothing

Key Learning Points Code:

M = Maths D= Drawing RK = Related Knowledge Sc = Science
P = Personal Skills Sk = Skill H = Hazards

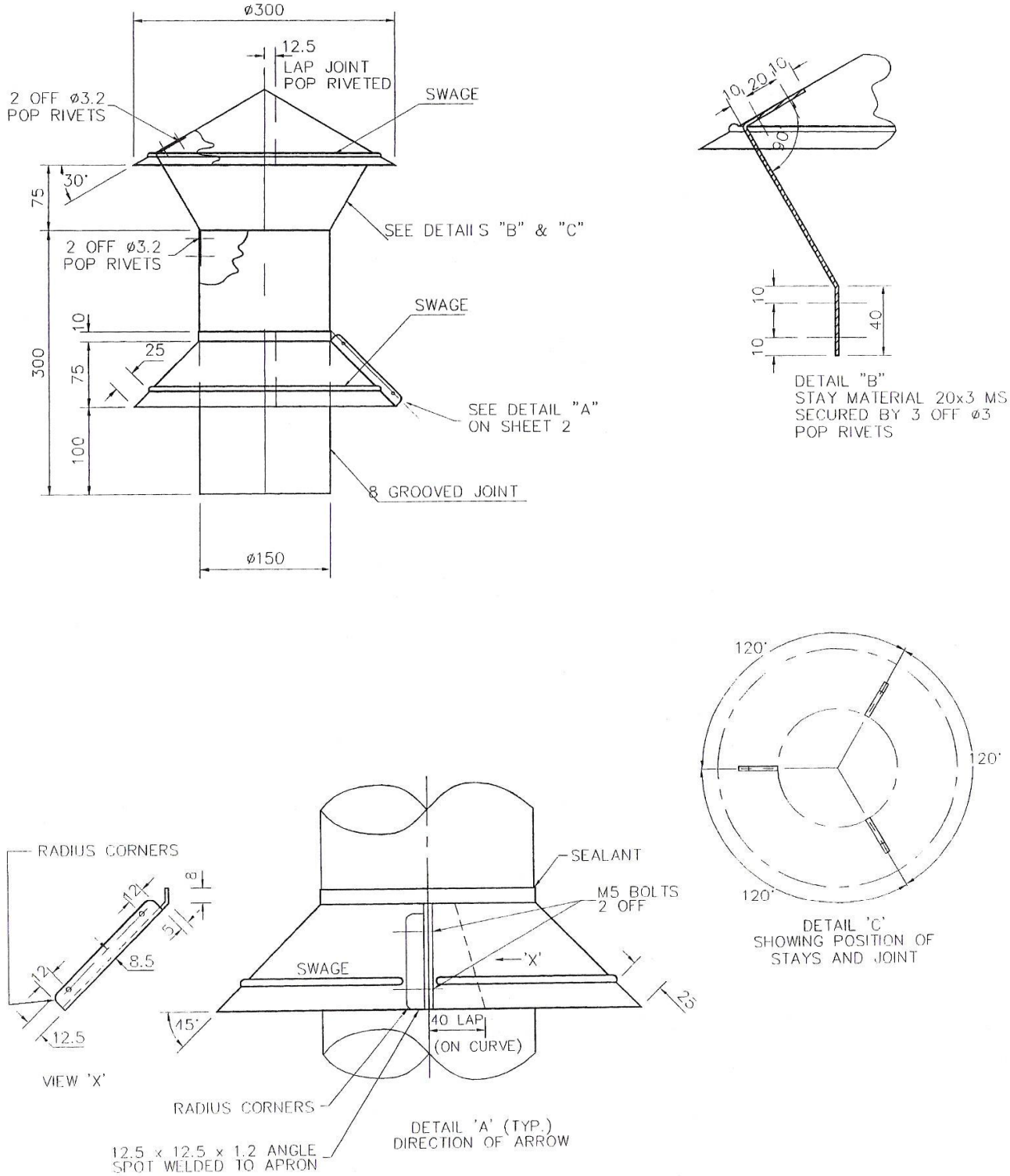

Figure 1 – Blow Cap, Stock and Apron

Blow Cap, Stock and Apron

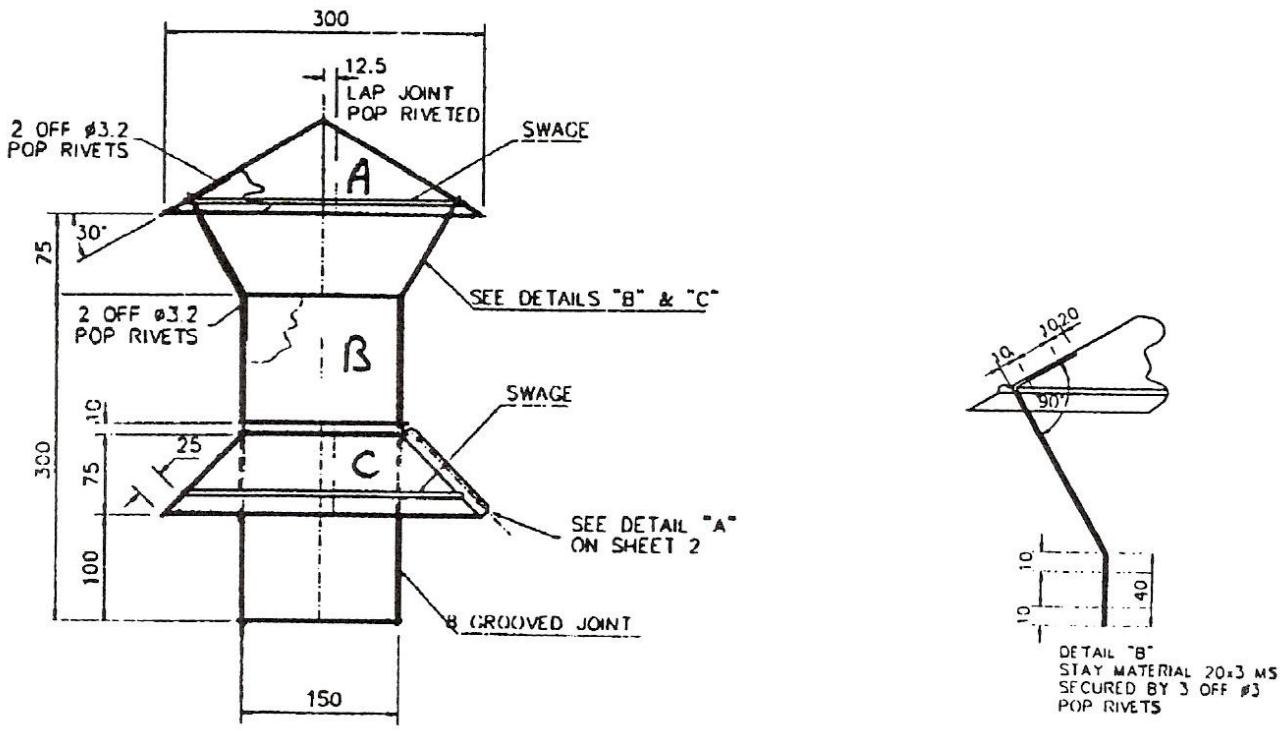

Figure 2 – A = Blowcap B = Stock C = Apron

1. A is the blow cap, B is the stock and C is the apron.

2. The blowcap is always twice the size of the stock.
   Hence A = 300 mm and B = 150 mm.

3. The height of the blowcap A above the stock B is always 1/2 the diameter of the stock B. Hence 75mm is the distance between A and B.

4. The angle of the blow cap is nearly always 30°.

5. It is necessary to mark out 1/2 of pipe B and blow cap A to obtain the length of the stays and the angle they should be bent at.

6. The stays are positioned equally around the blow cap. This divides the blow cap into three equal parts.

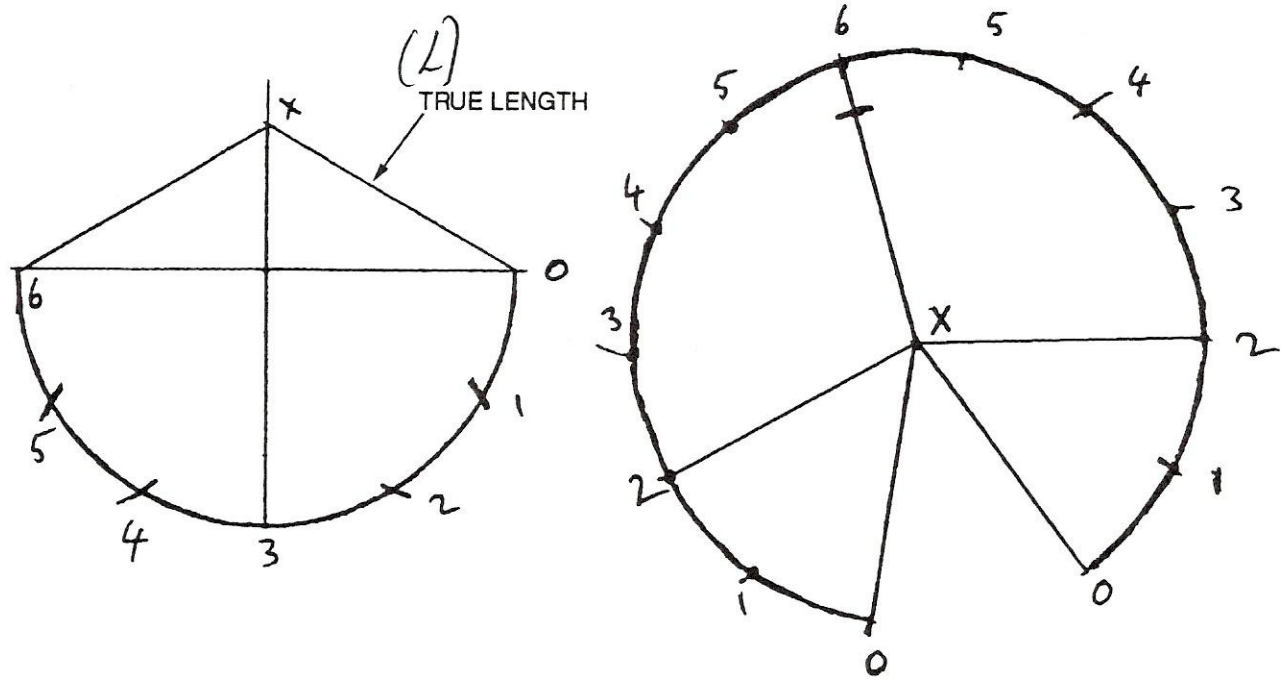

Figure 3 – Radial Line Method

Radial Line Method to Develop Cones

If we put the stays at points 2, 6, 2 we have spaced them out evenly.

Volume of cone = 1/3 $\pi r^2 H$

Volume of pyramid = 1/3 area of base x perpendicular height

Surface area of pyramid = find area of one triangle and multiply by four (1/2 base x P.H.)

Self Assessment

Questions on Background Notes – Module 4.Unit 6

1. What is the angle of the blow cap?

2. If the diameter of the blow cap is 300mm, what is the diameter of the stock pipe and the distance between blow cap and stock?

Answers to Questions 1-2. Module 4.Unit 6

1.

30º is nearly always the angle of the blow cap.

2.

Diameter of stock = 150mm

Distance between the two = 75mm or ½ diameter of stock.

Index

B

Blow Cap, Stock and Apron, 9
    Radial Line Method to Develop Cones, 10

S

Self Assessment, 11